ALPINE SNOWGUARDS™
www.alpinesnowguards.com

289 Harrel Street
Morrisville, VT 05661
Toll Free Phone 1.888.766.4273
Toll Free Fax 1.888.766.9994
Web www.alpinesnowguards.com
E-mail info@alpinesnowguards.com

07 72 53 Snow Guards

NOTES:
1. INSTALLATION TO BE COMPLETED IN ACCORDANCE WITH MANUFACTURER'S SPECIFICATIONS.
2. DO NOT SCALE DRAWINGS.
3. CONTACT MANUFACTURER FOR DETAILED LAYOUT.

REVISIONS		
REV.	DESCRIPTION	DATE

☑DESIRED PIPE CONFIGURATION
- ☐2 PIPE HI-HOLE
- ☐2 PIPE

☑SELECT DESIRED FINISH
- ☐MILL (STANDARD)
- ☐POWDER COAT

PIPE SYSTEM INCLUDES:
- ☑ICE FLAG
- ☑END CAPS
- ☑END COLLARS
- ☑PIPE
- ☑COUPLINGS

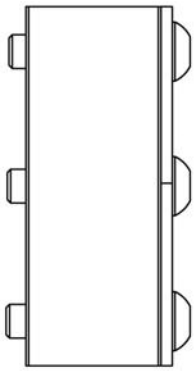

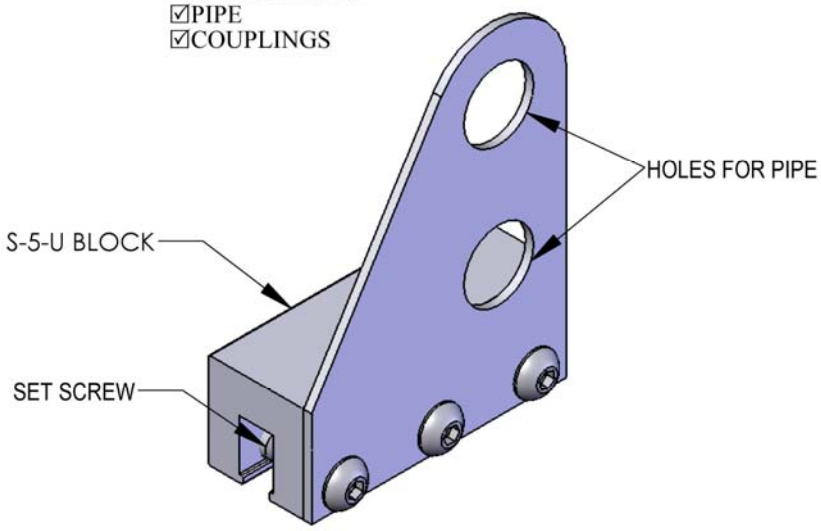

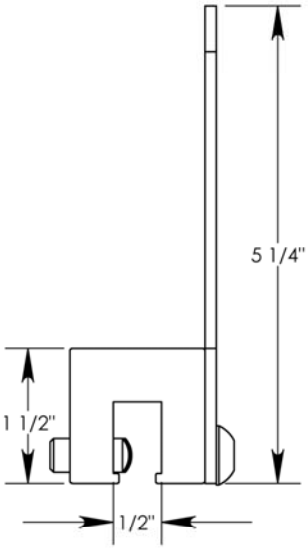

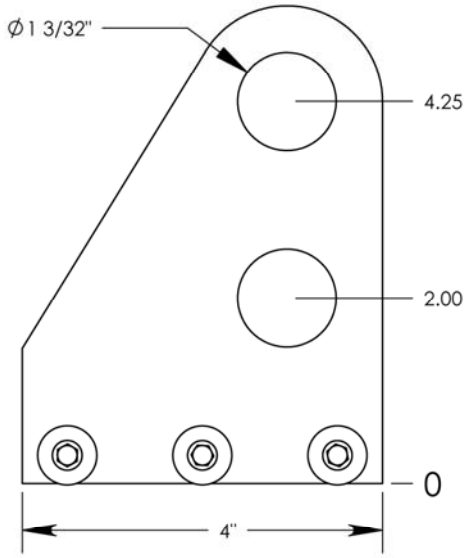

I have verified that this snow guard will fit the corrugation/rib for this project.

Signature: _____ Date: _____

To confirm order, return signed cut sheet and sales quote.

#4000 Two-Pipe Clamp to the Seam Snow Guard for Standing Seam Metal Roofs

© Copyright 2007, 2008 Alpine SnowGuards, Vermont Slate & Copper Services, Inc

Document version 08.24.2009